Senior Solar Sprint
Salina KS
21088-2

Table of Contents

Project Logs……3
Design Drawings……5
Design Details……7
Components List……9
Design Process Description……12

Project Logs

Competition Project Log

SENIOR SOLAR SPRINT COMPETITION

Date	Task	Time involved	Team member responsible	Obstacles encountered	Modifications Made	Comments
1. February 7, 2024	3D Print Gears	1.5 hours	Alan Andrew	Gear hole was too small	Made Gear hole bigger	We 3D printed a large gear that worked
2. February 7 2024	Prototype	1.5 hours	Blake Zane	Finding materials	Cut a chassis out of cardboard	Ended the day with a rough prototype
3. February 9 2024	Build first Chassis and print mounts	1.5 hours	Alan, Andrew, Blake, Zane	3D print turned into spaghetti Laser cutter would not work	Reprinted our mounts Changed lines to hairline on lasercutter	We reprinted the mounts and will test them next class
4. February 13 2024	Work on Chassis by creating wheels	1.5 hours	Alan + Andrew (Blake and Zane help when done)	N/A	We made the two back wheels 6 inches and added rubber bands around them.	It took a little while to design the wheel but we got the print going
5. February 13 2024	Take photos for documentation	15 Minutes	Blake	Had trouble getting the pictures to Zane	N/A	Collected photos of everything that we did
6. February 13 2024	Work on documentation and project log	1 hour	Zane	N/A	N/A	Had to collect a bit of data from models, but got everything done
7. February 21 2024	Make holes for wheel and gear	30 minutes	Alan	Had to keep adjusting hole size	Got hole to the correct size	We have the holes used to attach the bearing flats connected as well as a place for the gear

Competition Project Log

SENIOR SOLAR SPRINT COMPETITION

Date	Task	Time involved	Team member responsible	Obstacles encountered	Modifications Made	Comments
1. February 21, 2024	Work on motor mount	30 minutes	Blake	The number of popsicle sticks needed took awhile to figure out	Put tape around the stack to be able to glue the motor on	The mount isn't extremely secure, so we might change it.
2. February 21, 2024	Work on attaching the back wheels	1.5 hours	Zane and Andrew	Very difficult to figure out how to attach the wheels	Added Vex bearing flats to attach the wheels	We didn't fully add the wheels today, but we have a way to do it.
3. February 23, 2024	3D Print front wheel and half of panel mount	1 hour	Alan	It took awhile to figure out the specifications on the wheel	Mount now isn't as big, which is helpful	The wheel and the mount print came out very nicely for our build
4. February 23, 2024	Work on motor mount	30 minutes	Blake	Changing the height of the motor mount took awhile	Switched from popsicle sticks to cardboard stand	This mount is much more secure than the other one, but the gears aren't meshing right
5. February 23, 2024	Work on attaching back wheels	1 hour	Zane and Andrew	It took awhile to figure out what spacing we needed.	We were only using shaft collars before, but we added spacers	The wheels spin much more freely and are secured better
6. February 27, 2024	Work on attaching front wheels	30 minutes	Zane and Andrew	We attached the wheels too tightly	We loosened the shaft collars to make the wheel spin more freely	The front wheel spins very nicely with the ground
7. February 27, 2024	Mesh the gears	15 minutes	Zane and Andrew	N/A	We pushed the cardboard down further and hot glued it	The gears now mesh pretty well

Competition Project Log

SENIOR SOLAR SPRINT COMPETITION

Date	Task	Time involved	Team member responsible	Obstacles encountered	Modifications Made	Comments
1. February 27, 2024	Attach solar panel mount w/ height addition	30 minutes	Alan	Took awhile to figure out the correct height	Had to add a hole to the front to hold the two ping pong balls	The mount works to hold the solar panel pretty well
2. February 27, 2024	Work on wiring for the motor	1 hour	Blake	It is hard to know which wire plugs into which side	N/A	Figured out a way to effectively wire the device
3. March 1, 2024	Work on weight distribution and height	1 hour	Alan Andrew Blake	SSS car kept turning to the right and we were 1 inch too big	Had to reduce the size of the SP mount also added weight to the left side	Weight made the car much slower so might need to take it off
4. March 1, 2024	Update Work Log and Supply List	30 minutes	Zane	N/A	Made sure all of the necessary information was included	Essentially just updated our document to make sure that it was correct
5. March 4, 2024	Work on Documentation	1.5 hours	Alan, Andrew Blake, Zane	N/A	Updated our entire portfolio with accurate information	Everyone was given a task to complete to help finish the documentation of the design.
6.						
7.						

Design Drawing

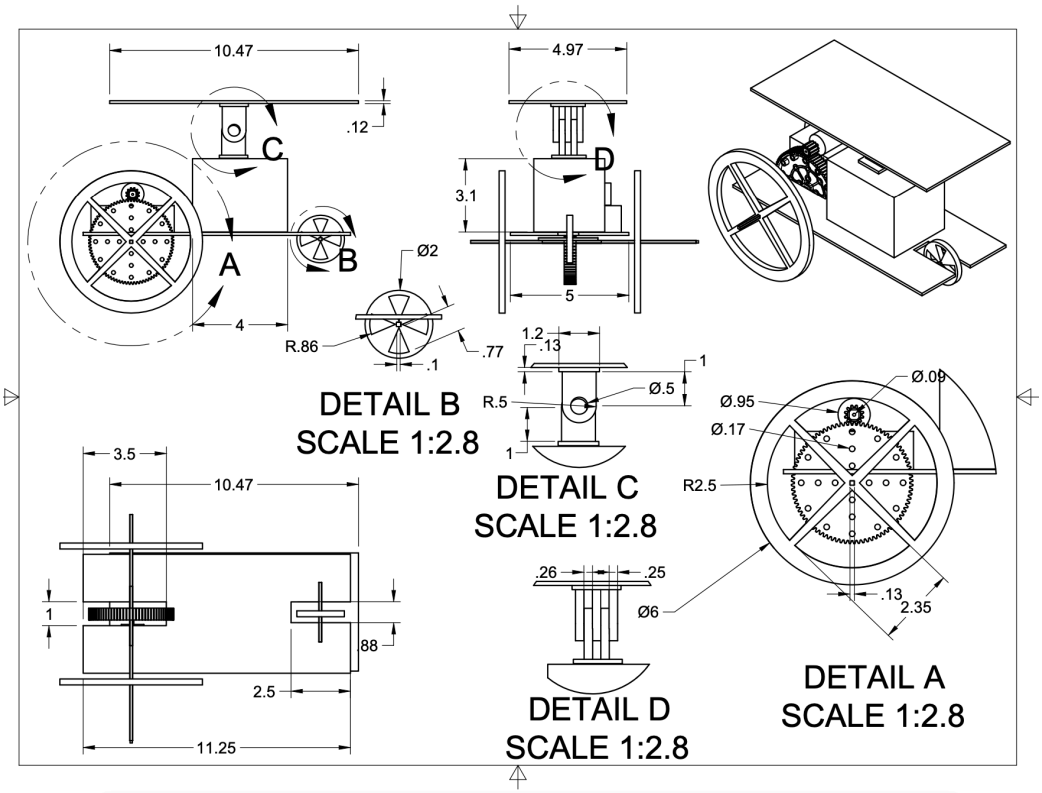

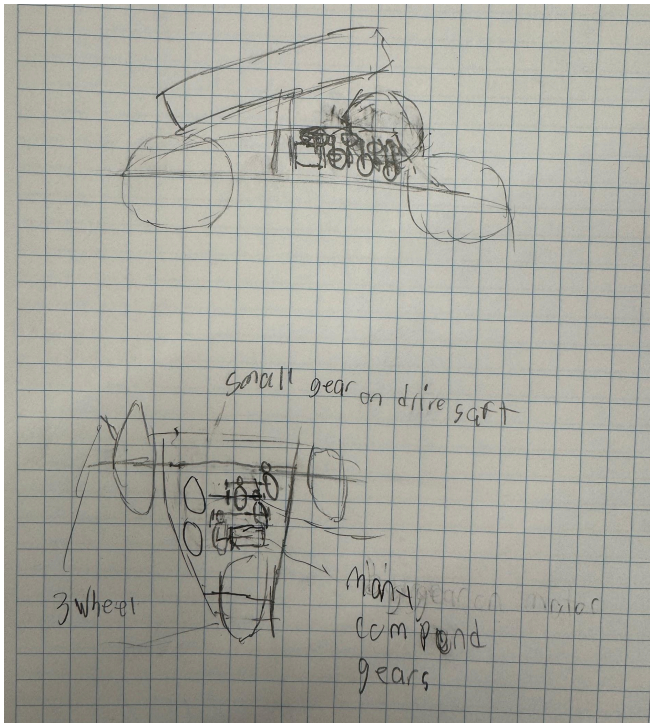

Design Details

The car itself is 11.5 inches long 6 inches in width and height is ….
The two back wheels are 6 inches in diameter and .25 inches in width. The front wheel is 2 inches in diameter and .25 inches in width. The gear ratio is 7:1. The motor is .5-6 volts and 95-1400 milliamps. The dimensions are 1 inch diameter and 1.25 inch length. The solar panel is 3.5 inches by 13 inches. It is capable of 3 volts.

Components List

SENIOR SOLAR SPRINT

SUPPLIED COMPONENTS LIST

Part	Part Description	Purchased /Recycled	Cost
Gear	3D printed 12-tooth Gear	Recycled	N/A
Solar Panel	Standard solar panel provided in the kit	Given	N/A
Motor	Standard 3 VDC motor provided in the kit	Given	N/A
Gear	VEX 84-tooth Gear	Recycled	N/A
Wheel	3D printed 2 inch diameter wheel	Recycled	N/A
Wheel	3D printed 6 inch diameter wheel	Recycled	N/A
Battery Pack	Standard 2 AA battery pack (x2)	Recycled	N/A
Spacers	8mm VEX plastic sapcers (x16)	Recycled	N/A
Nuts	VEX KEPS nuts (x8)	Recycled	N/A
Axle	Vex Axle 22.3 cm	Recycled	N/A
Axle	Vex Axle 17.4 cm	Recycled	N/A
Screws	1/2 inch VEX screws (x8)	Recycled	N/A
Bearing	VEX Pillow Block Bearing (x4)	Recycled	N/A
Hot Glue	2.53173879 in^3 of hot glue	Recycled	N/A
Duct Tape	13.6 cm strip of duct tape	Recycled	N/A
Masking Tape	15cm strip of masking tape	Recycled	N/A
Wood Insert	5.6 cm wooden insert for solar panel mount	Recycled	N/A
Rubber Bands	2 number 64 type rubber bands	Recycled	N/A
Shaft Collar	VEX shaft collars (x8)	Recycled	N/A
Cardboard	8 cm by 8 cm piece of VEX cardboard	Recycled	N/A
Cardboard	19 cm by 10 cm piece of cardboard	Recycled	N/A
Cables	2 6.5 cm cables for alligator clips	Recycled	N/A
Aligator Clips	Mueller brand clips (x2)	Recycled	N/A
Mount Top	3D printed adjustable mount to attach to solar panel	Recycled	N/A
Mount Bottom	3D printed adjustable mount to attach to solar panel stand	Recycled	N/A
		TOTAL	N/A

Design Process Description

The members of this group are Alan Morey, Andrew Schmidling, Blake Kite, and Zane Keefover. The problem we are trying to solve is to create a solar powered car that fits the criteria of Senor Solar Sprint challenge. We began this project on February 7th 20204. We were complete in our goals of the project on March 4th 2024. On this date we had completed all work on the documentation and building. We worked for an hour and thirty on alternating weekdays. In total there was 12 hours of work put in this project. The problem we had to solve is to create a solar powered car that can travel 20 meters and carry 2 table tennis balls that are easily removable. This car had to be no larger than 60 cm in length, 30 cm in width, and 30 cm tall. There was a 50 dollar budget, but recycled materials could be used and would not go against the budget . The cost of the solar panel and motor are not counted because they are standardized and provided in the kit that must be used. If the conditions are not favorable for the solar panel, then the car will be run off of two AA 1.5v batteries. The motors and solar panels could not be tampered with, or modified. Once we had fully understood the requirements and regulations, we began the design progress. Our first designs were all over the place and were very ambitious. As we worked through the design process, we refined our plan by taking bits and pieces from each prior design. This culminated in our final design. This car would be of wood and 3D printed construction. It has 3 wheels and the back two are powered. We knew we wanted gears going from the motor to the drive axle, but were unsure what gear ratio was going to be needed. We decided to leave this variable for once we got a prototype build, because we want to test out many gear ratios to find the best for the car we build. After coming up with the design plans, we began to construct our car. The first work day of the project, Alan made a CAD

model of a 12-tooth Vex. We printed this size purely for testing purposes. The purpose of this CAD model was to create a gear with a small enough hole to allow the 3 VDC motor's axle to fit inside it. In this first test, the hole was a touch too small for the axle to fit. Luckily, the print time was only fifteen minutes, so we could print another one with a slightly larger hole in the same work session . This one was able to fit in the motor's axle, although it was a little tight . Despite this, it did seem to work pretty well, so we printed an 84-tooth vex gear, which is the actual size we need, with the correct hole size. We had to test it in the next work session as it would take over an hour to print and we were out of time. On our next work session we tested the 84-tooth gear in the axle of the motor. We discovered that the hole was a little tighter than we expected,due to the 3D printer not having perfect tolerances . It still went onto the motor's axle , so we decided to keep it. There was excess filament on the gear, so Andrew cleaned up the print. Alan had made a CAD model of an adjustable solar panel mount,after a group deliberation , we started printing it. The mount is composed of a flat base with three evenly spaced arches with rounded tops. In each of these arches, there are .25 radius holes all the way through them. We printed two of these models at once. Unfortunately, the 3D printed had an error, so we had to restart the print before leaving. This left us to test the mount the next day. Lastly, we laser cut a rectangular piece of wood that is 5 x 11.5 inches. One problem we ran into was that the laser cutter wasn't cutting our drawing. We realized that we didn't have one of the settings right, so we fixed it. Once we had the rectangle cut and print printing we left for the day. Returning to the project from where we left off, Blake took pictures of the objects that we have already created. These pictures were given to Zane to add to the documentation. Alan created a CAD model of a 6 inch diameter wheel so it could be 3D printed. This design would be for our rear wheels. We started printing only one wheel first as a test. The 3D print would not be done in this work session, so we had to test it next time. Alan also created a model of a 2.5 inch diameter front wheel that would be printed and tested next class period. Andrew attached the solar panel adjustable mount to our solar panel as well. Without having the wheels to test, there isn't a lot else that was done, besides documentation and waitting for prints to be done.

Come back to the project on February 21 , we now had one working back wheel,and the other was printing. This allowed us to start mapping out where the axles and motor was going to go. Alan started cutting out a slot in the base for the gear on the drive axle mesh with the one on the motor. Blake started working on building the motor stand. Zane and Andrew worked on attaching the rear axle. They had to find the right materials that would allow them to mount that axle to the base. February 23 was a day of a lot of progress. We had both rear wheels printed and the motor mounted. This allowed us to test the gear ratio. We originally wanted to have the motor to axle gears for speed. We tested this but found that the motor did have enough torque to spin the wheels, even without load. This was a crucial bit of testing because it meant we had to gear the motor for torque. This meant we had to modify the motor mount to accept this new gear train. While working on the drivetrain we had a front wheel being printed. After this point in the project was mostly assembly and testing because all of the design elements had been finished. We had our first working prototype early on February 27. We got the front wheel attached and were able to run the car off of a battery pack. Once we had the base of the car working we began to focus on the transportation of the ping pong balls. For this Alan and Andrew build a simple, small cardboard box with an opening closed by a rubber band. This box also allowed an attaching point for the solar panel mount. Once all the components were attached Blake worked on wiring the motor, battery, and solar panel. At the end of the work session we had a complete car that met most of the requirements, but it was too tall. On March 1st we finished building the car in its entirety. The first thing Alan and Blake did was lower the ping pong ball box because it was what pushed us out of the size limit. Now that the car was working and in size, Zane and Andrew worked on the fine tuning of the car. This was weight distribution so the car tracked straight. They also worked on fixing the wheel so it went faster. Once the car was balanced, Zane moved on to working on documentation, while the rest of the group ran testing on the car. On our final day of work we all worked together on completing the documentation required for the project. Zane had done a great job of keeping track and on top of the documentation, but now that the car was done it was time to put all of the paperwork together. Alan worked on

CADing the final design of our car. Zane, Andew,and Blake worked on the other aspects of documentation. Their goal was getting everything organized. At the end of this project, our group had completed all necessary requirements. In the completion of this project, we learned a lot about the engineering and design process. We had to build a lot of skills that could be transferred to the real world engineering field. It took a lot of problem solving to work out what gearing would work for our car. We also had a great deal of struggle working with the 3D printers,making sure our parts came out to the size we need. We worked as a group to solve these problems and created a working car. The labor was distributed evenly, and each team member worked the components and techniques that they were familiar with. Even though each team member graduated to what they were comfortable with, there was still an opportunity for everyone to expand their knowledge. This project was completed in a timely manner but still at a leisurely pace. In the end the group is satisfied with the final project. We all worked together and learned a lot. This project was a good learning experience and built meaningful skills for each member.